PAJERO iO

WORKSHOP MANUAL

FOREWORD

This Workshop Manual contains procedures for service mechanics, including removal, disassembly, inspection, adjustment, reassembly and installation. Use the following manuals in combination with this manual as required.

TECHNICAL INFORMATION MANUAL	PYJE9805
WORKSHOP MANUAL	
ELECTRICAL WIRING	PHJE9814
BODY REPAIR MANUAL	PBJE9812
ENGINE GROUP	PWEE9520-A
	PWEE9502-E
PARTS CATALOGUE	B803F009A

All information, illustrations and product descriptions contained in this manual are current as at the time of publication. We, however, reserve the right to make changes at any time without prior notice or obligation.

MITSUBISHI MOTORS CORPORATION

"GDI" is the trade mark which Mitsubishi Motors Corporation holds.

© Mitsubishi Motors Corporation

Dec. 1998

General 00
Engine 11
Engine Lubrication 12
Fuel 13
Engine Cooling 14
Intake and Exhaust 15
Engine Electrical 16
Engine and Emission Control 17
Clutch 21
Manual Transmission 22
Automatic Transmission 23
Propeller Shaft 25
Front Axle 26
Rear Axle 27
Wheel and Tyre 31
Power Plant Mount 32
Front Suspension 33
Rear Suspension 34
Service Brakes 35
Parking Brakes 36
Steering 37
Body 42
Exterior 51
Interior and Supplemental Restraint System (SRS) 52
Chassis Electrical 54
Heater, Air Conditioner and Ventilation 55

WARNING REGARDING SERVICING OF SUPPLEMENTAL RESTRAINT SYSTEM (SRS) EQUIPPED VEHICLE

WARNING!

(1) Improper service or maintenance of any component of the SRS, or any SRS-related component, can lead to personal injury or death to service personnel (from inadvertent firing of the air bag) or to the driver and passenger (from rendering the SRS inoperative).

(2) The SRS components should not be subjected to temperature of 93°C or more. So, remove the SRS-ECU, driver's and front passenger's air bag modules, clock spring, side impact sensors and front seat assemblies (side air bag modules) before drying or baking the vehicle after painting.

(3) Service or maintenance of any SRS component or SRS-related component must be performed only at an authorized MITSUBISHI dealer.

(4) MITSUBISHI dealer personnel must thoroughly review this manual, and especially its GROUP 52B – Supplemental Restraint System (SRS), before beginning any service or maintenance of any SRS component or any SRS-related component.

NOTE

Section titles with asterisks (*) in the table of contents in each group indicate operations requiring warnings.

GENERAL

CONTENTS

HOW TO USE THIS MANUAL 2

Scope of Maintenance, Repair and Servicing Explanations 2
Indication of Destination 2
Definition of Terms 2
Indication of Tightening Torque 2
Model Indications 3
Explanation of Manual Contents 4

HOW TO USE TROUBLESHOOTING/INSPECTION SERVICE POINTS 6

Troubleshooting Contents 6
Diagnosis Function 7
How to Use the Inspection Procedures 9
Connector Measurement Service Points 10
Connector Inspection 11
Inspection Service Points for a Blown Fuse ... 12
Points to Note for Intermittent Malfunctions 12

VEHICLE IDENTIFICATION 13

Vehicle Information Code Plate 13
Models 14
Model Code 16
Chassis Number 17
Engine Model Number 18

MAJOR SPECIFICATIONS 18

PRECAUTIONS BEFORE SERVICE 26

SUPPLEMENTAL RESTRAINT SYSTEM (SRS) 30

SUPPORT LOCATIONS FOR LIFTING AND JACKING 34

Support Positions for a Garage Jack and Axle Stands 34
Support Positions for a Single-Post Lift or Double-Post Lift 35
Support Positions and Support Method for an H-Bar Lift 36

STANDARD PART/TIGHTENING-TORQUE TABLE 38

HOW TO USE THIS MANUAL

SCOPE OF MAINTENANCE, REPAIR AND SERVICING EXPLANATIONS

This manual provides explanations, etc. concerning procedures for the inspection, maintenance, repair and servicing of the subject model. Note, however, that for engine and transmission-related component parts, this manual covers only on-vehicle inspections, adjustments, and the removal and installation procedures for major components.
For detailed information concerning the inspection, checking, adjustment, disassembly and reassembly of the engine, transmission and major components after they have been removed from the vehicle, please refer to separate manuals covering the engine and the transmission.

ON-VEHICLE SERVICE

"On-vehicle Service" is procedures for performing inspections and adjustments of particularly important locations with regard to the construction and for maintenance and servicing, but other inspection (for looseness, play, cracking, damage, etc.) must also be performed.

INSPECTION

Under this title are presented inspection and checking procedures to be performed by using special tools and measuring instruments and by feeling, but, for actual maintenance and servicing procedures, visual inspections should always be performed as well.

INDICATION OF DESTINATION

General Export and GCC are used for convenience to indicate destination.
NOTE
(1) "General Export" means territories other than Europe, GCC, Australia, New Zealand, the U.S.A. and Canada.
(2) "GCC" indicates countries that are members of the (Persian) Gulf Cooperation Council of nations.
(3) In some instances, vehicles with other specifications may be shipped to some countries.

DEFINITION OF TERMS

STANDARD VALUE

Indicates the value used as the standard for judging the quality of a part or assembly on inspection or the value to which the part or assembly is corrected and adjusted. It is given by tolerance.

LIMIT

Shows the standard for judging the quality of a part or assembly on inspection and means the maximum or minimum value within which the part or assembly must be kept functionally or in strength. It is a value established outside the range of standard value.

REFERENCE VALUE

Indicates the adjustment value prior to starting the work (presented in order to facilitate assembly and adjustment procedures, and so they can be completed in a shorter time).

CAUTION

Indicates the presentation of information particularly vital to the worker during the performance of maintenance and servicing procedures in order to avoid the possibility of injury to the worker, or damage to component parts, or a reduction of component or vehicle function or performance, etc.

INDICATION OF TIGHTENING TORQUE

The tightening torque shown in this manual is a basic value with a tolerance of ±10% except the following cases when the upper and lower limits of tightening torque are given.
(1) The tolerance of the basic value is within ±10%.
(2) Special bolts or the like are in use.
(3) Special tightening methods are used.

MODEL INDICATIONS

The following abbreviations are used in this manual for classification of model types.

GDI: Indicates the gasoline direct injection.
MPI: Indicates the multipoint injection, or engine equipped with the multipoint injection.
DOHC: Indicates an engine with the double overhead camshaft, or a model equipped with such an engine.
SOHC: Indicates an engine with the single overhead camshaft, or a model equipped with such an engine.
M/T: Indicates the manual transmission, or models equipped with the manual transmission.
A/T: Indicates the automatic transmission, or models equipped with the automatic transmission.
A/C: Indicates the air conditioner.

EXPLANATION OF MANUAL CONTENTS

Indicates procedures to be performed before the work in that section is started, and procedures to be performed after the work in that section is finished.

Component Diagram
A diagram of the component parts is provided near the front of each section in order to give a reader a better understanding of the installed condition of component parts.

Indicates (by symbols) where lubrication is necessary.

Maintenance and Servicing Procedures
The numbers provided within the diagram indicate the sequence for maintenance and servicing procedures.

- Removal steps:
  The part designation number corresponds to the number in the illustration to indicate removal steps.
- Disassembly steps:
  The part designation number corresponds to the number in the illustration to indicate disassembly steps.
- Installation steps:
  Specified in case installation is impossible in reverse order of removal steps. Omitted if installation is possible in reverse order of removal steps.
- Reassembly steps:
  Specified in case reassembly is impossible in reverse order of disassembly steps. Omitted if reassembly is possible in reverse order of disassembly steps.

Classifications of Major Maintenance/Service Points

When there are major points relative to maintenance and servicing procedures (such as essential maintenance and service points, maintenance and service standard values, information regarding the use of special tools, etc.), these are arranged together as major maintenance and service points and explained in detail.

◀A▶ : Indicates that there are essential points for removal or disassembly.
▶A◀ : Indicates that there are essential points for installation or reassembly.

Symbols for Lubrication, Sealants and Adhesives

Information concerning the locations for lubrication and for application of sealants and adhesives is provided, by using symbols, in the diagram of component parts or on the page following the component parts page, and explained.


: Grease
(multipurpose grease unless there is a brand or type specified)


: Sealant or adhesive


: Brake fluid or automatic transmission fluid


: Engine oil, gear oil or air conditioner compressor oil


: Adhesive tape or butyl rubber tape

Indicates the group title.

Indicates the section title.

Indicates the group number.

Indicates the page number.

STEERING – Power Steering Oil Pump 37A-29

POWER STEERING GEAR BOX

120000038

REMOVAL AND INSTALLATION

Pre-removal Operation
(1)Power Steering Fluid Draining (Refer to P. 37A-10.)
(2)Air Cleaner Assembly Removal
(3)Under Cover Removal (Refer to GROUP 42 – Under Cover.)

<2WD>

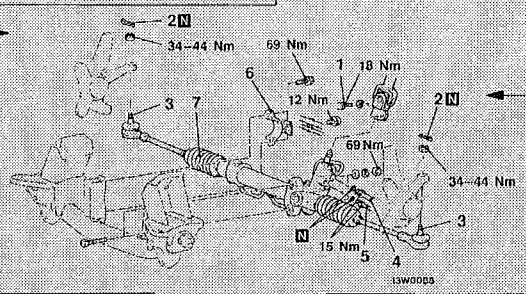

N Denotes non-reusable part.

Denotes tightening torque.
For bolts and nuts which do not have a tightening torque listed, refer to the "Standard Parts-tightening-torque Table".

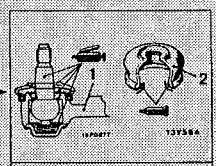

Sealant: 3M ATD Part No. 8661 or equivalent

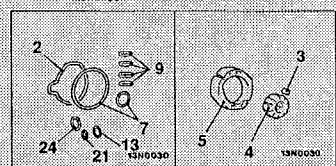

Oil pump seal kit | Oil pump cartridge kit

Repair kit or set parts are shown. (Only very frequently used parts are shown.)

Removal steps
1. Lower shaft assembly and gear box connecting bolt
2. Split pin
3. Connection for tie-rod end and knuckle
4. Connection for return tube
5. Connection for pressure tube
6. Clamp
7. Gear box assembly

◀A▶ ◀B▶

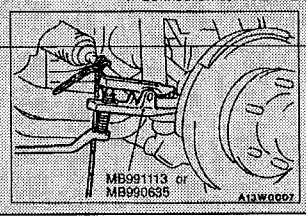

REMOVAL SERVICE POINTS

◀A▶ TIE-ROD END DISCONNECTION◀

Caution
1. Using the special tool, loosen the tie rod end mounting nut. Only loosen the nut; do not remove it from the ball joint.
2. Support the special tool with a cord, etc. to prevent it from coming off.

Operating procedures, cautions, etc. on removal, installation, disassembly and reassembly are described.

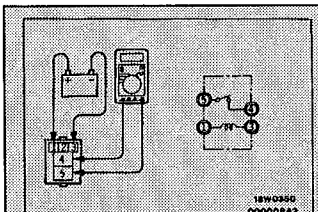

HEADLAMP RELAY CONTINUITY INSPECTION

Battery voltage	Terminal No.			
	1	3	4	5
Power is not supplied	○	○		
Power is supplied	⊕	⊖	○	○

○——○ indicates that there is a continuity between the terminals.
⊕——⊖ indicates terminals to which battery voltage is applied.

35A-26 BASIC BRAKE SYSTEM – Master Cylinder and Brake Booster

Lubrication and sealing points

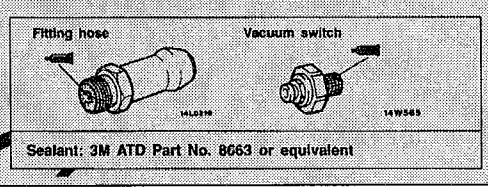

Sealant: 3M ATD Part No. 8663 or equivalent

The title of the page (following the page on which the diagram of component parts is presented) indicating the locations of lubrication and sealing procedures.

00002471

HOW TO USE TROUBLESHOOTING/INSPECTION SERVICE POINTS

Troubleshooting of electronic control systems for which the MUT-II can be used follows the basic outline described below. Furthermore, even in systems for which the MUT-II cannot be used, part of these systems still follow this outline.

TROUBLESHOOTING CONTENTS

1. STANDARD FLOW OF DIAGNOSIS TROUBLESHOOTING

The troubleshooting sections follow the basic diagnosis flow which is given below. If the diagnosis flow is different from that given below, or if additional explanation is required, the details of such differences or additions will also be listed.

Diagnosis method

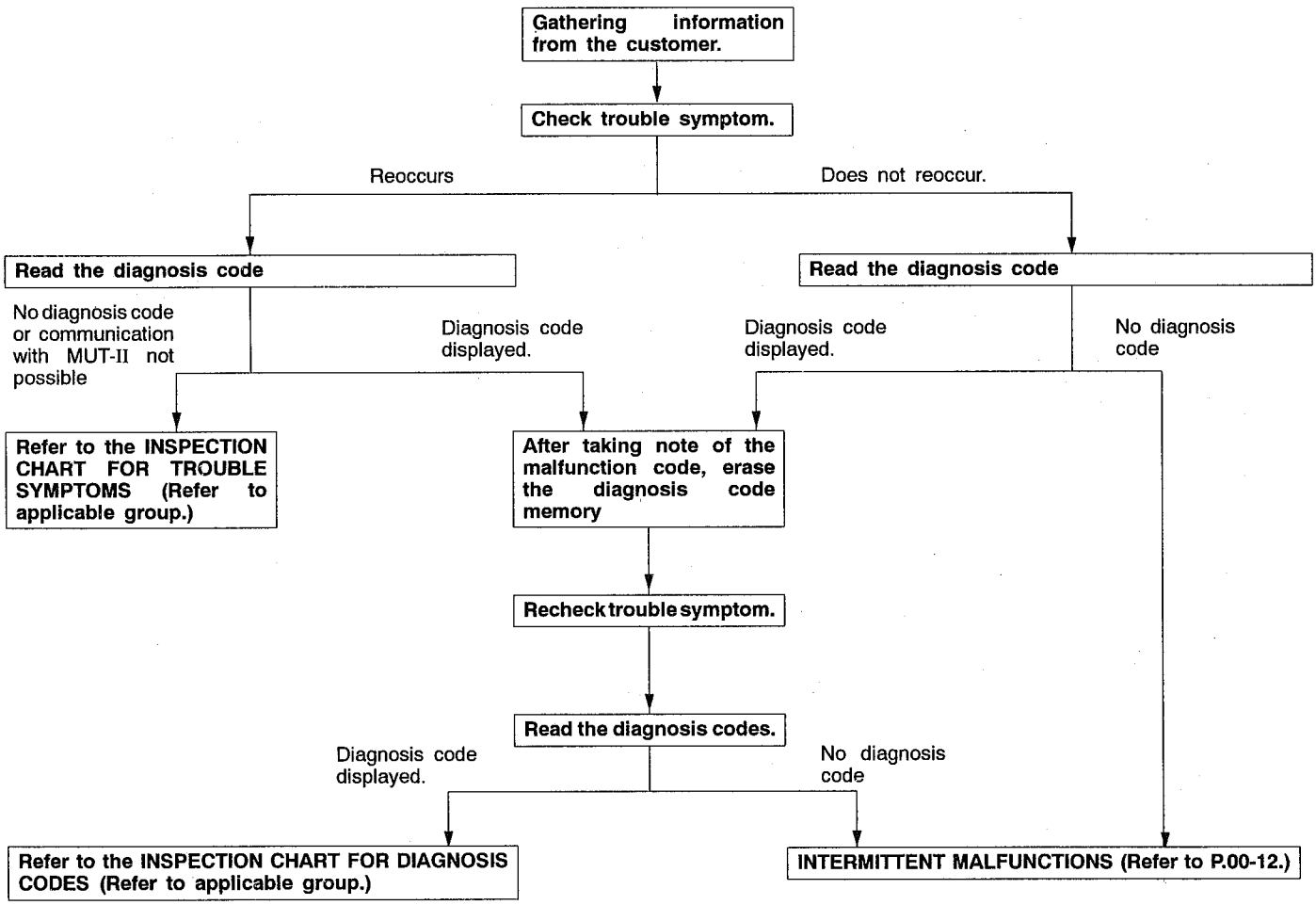

2. SYSTEM OPERATION AND SYMPTOM VERIFICATION TESTS

If verification of the trouble symptoms is difficult, procedures for checking operation and verifying trouble symptoms are shown.

3. DIAGNOSIS FUNCTION

Details which are different from those in the "Diagnosis Function" section on the next page are listed.

4. INSPECTION CHART FOR DIAGNOSIS CODES

5. INSPECTION PROCEDURE FOR DIAGNOSIS CODES

Indicates the inspection procedures corresponding to each diagnosis code. (Refer to P.00-9 for how to use the inspection procedures.)

6. INSPECTION CHART FOR TROUBLE SYMPTOMS

If there are trouble symptoms even though the results of inspection using the MUT-II show that all diagnosis codes are normal, inspection procedures for each trouble symptom will be found by means of this chart.

7. INSPECTION PROCEDURE FOR TROUBLE SYMPTOM

Indicates the inspection procedures corresponding to each trouble symptoms classified in the Inspection Chart for Trouble Symptoms. (Refer to P.00-9 for how to use the inspection procedures.)

8. SERVICE DATA REFERENCE TABLE

Inspection items and normal judgement values have been provided in this chart as reference information.

9. CHECK AT ECU TERMINALS

Terminal numbers for the ECU connectors, inspection items and standard values have been provided in this chart as reference information.

10. INSPECTION PROCEDURES USING AN OSCILLOSCOPE

When there are inspection procedures using an oscilloscope, these are listed here.

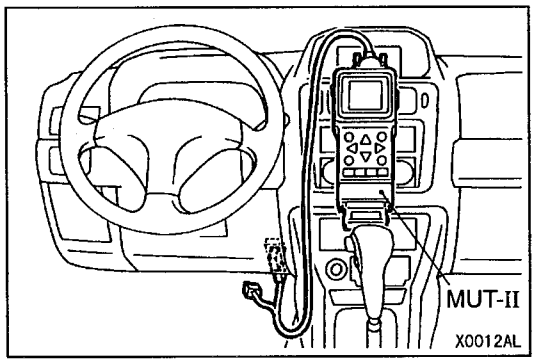

DIAGNOSIS FUNCTION

METHOD OF READING DIAGNOSIS CODES

WHEN USING THE MUT-II

Connect the MUT-II to the diagnosis connector and take a reading of the diagnosis codes.

Caution
Turn the ignition switch to the LOCK (OFF) position before connecting or disconnecting the MUT-II.

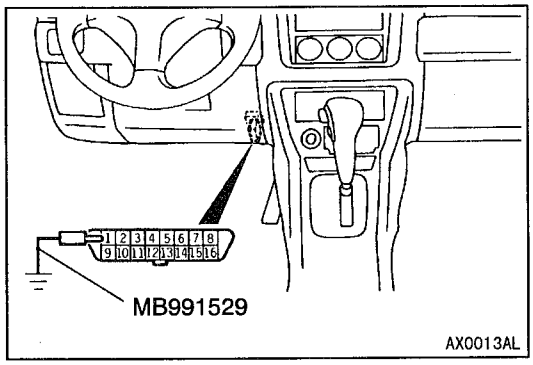

WHEN USING THE WARNING LAMP

1. Use the special tool to earth No.1 terminal (diagnosis control terminal) of the diagnosis connector.
2. Remove the valve relay to check the ABS.

   NOTE
   That is because the valve relay is off and the warning lamp remains lit if the ABS is defective.
3. Turn the ignition switch ON.
4. Read out a diagnosis code by observing how the warning lamp flashes.

Applicable systems

System name	Warning lamp name
GDI, MPI	Engine warning lamp
A/T	Neutral position indicator lamp
ABS	ABS warning lamp

Indication of diagnosis code by warning lamp

When the diagnosis code No.24 is output

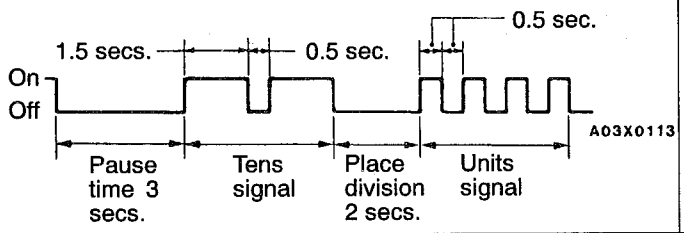

When no diagnosis code is output*

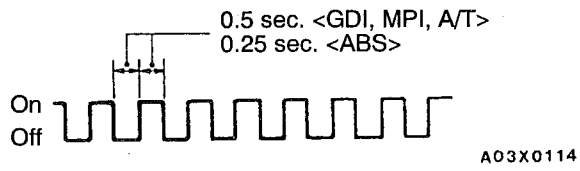

NOTE
*: Even if the ABS is working properly, diagnosis code No.52 is detected when the valve relay is removed.

METHOD OF ERASING DIAGNOSIS CODES

WHEN USING THE MUT-II

Connect the MUT-II to the diagnosis connector and erase the diagnosis code.

Caution
Turn the ignition switch to the LOCK (OFF) position before connecting or disconnecting the MUT-II.

WHEN NOT USING THE MUT-II

1. Turn the ignition switch to the LOCK (off) position.
2. After disconnecting the battery cable from the negative (–) battery terminal, wait for 10 seconds or more and reconnect the cable.
3. Warm up the engine and run at idle for about 15 minutes.

HOW TO USE THE INSPECTION PROCEDURES

The causes of a high frequency of problems occurring in electronic circuitry are generally the connectors, components, the ECU and the harnesses between connectors, in that order. These inspection procedures follow this order, and they first try to discover a problem with a connector or a defective component.

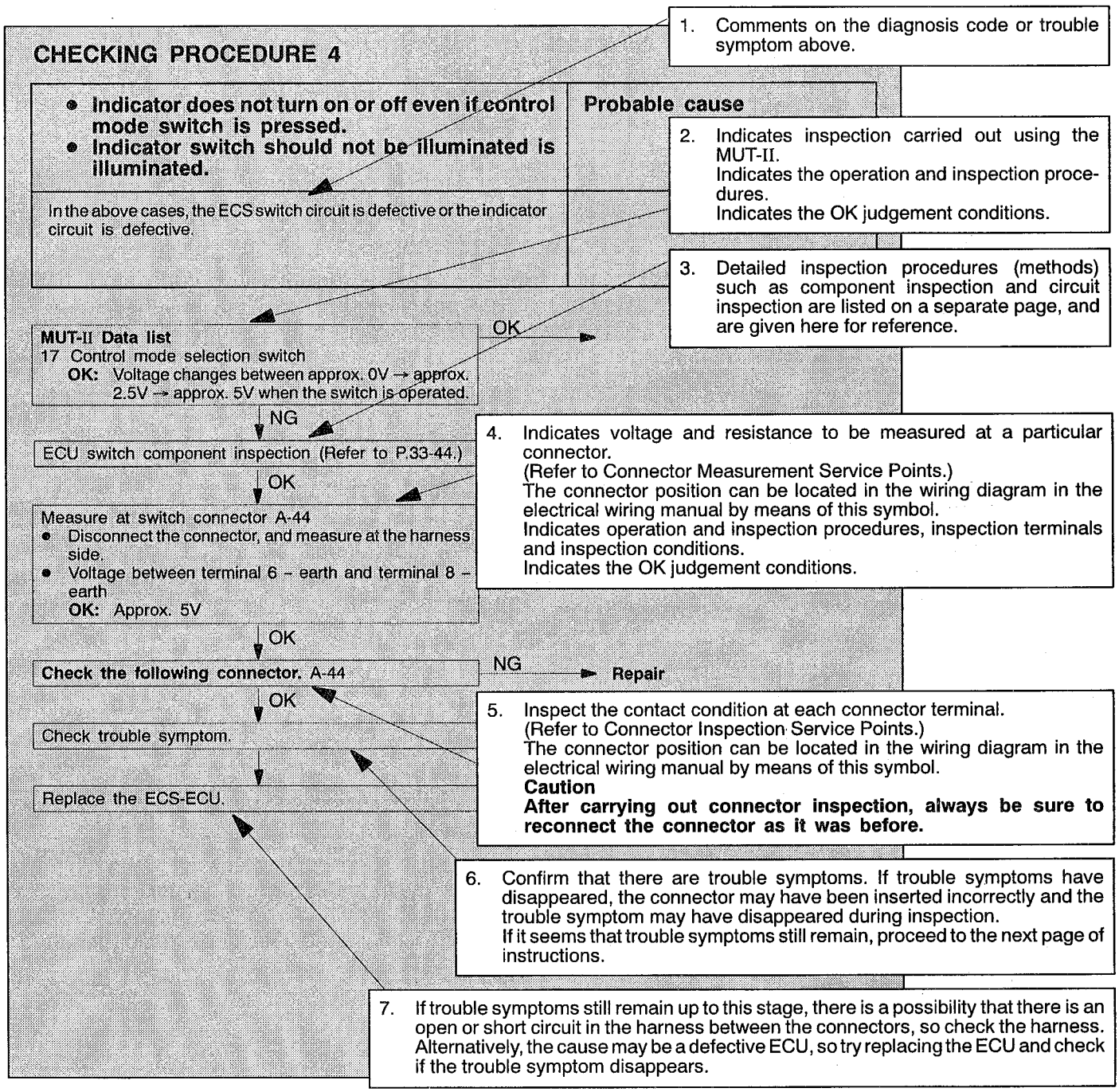

HARNESS INSPECTION

Check for an open or short circuit in the harness between the terminals which were defective according to the connector measurements. Carry out this inspection while referring to the electrical wiring manual. Here, "Check harness between power supply and terminal xx" also includes checking for blown fuses. For inspection service points when there is a blown fuse, refer to "Inspection Service Points for a Blown Fuse."

MEASURES TO TAKE AFTER REPLACING THE ECU

If the trouble symptoms have not disappeared even after replacing the ECU, repeat the inspection procedure from the beginning.

CONNECTOR MEASUREMENT SERVICE POINTS

Turn the ignition switch to the LOCK (OFF) position when connecting or disconnecting the connectors and turn the ignition switch ON when measuring, unless otherwise instructed.

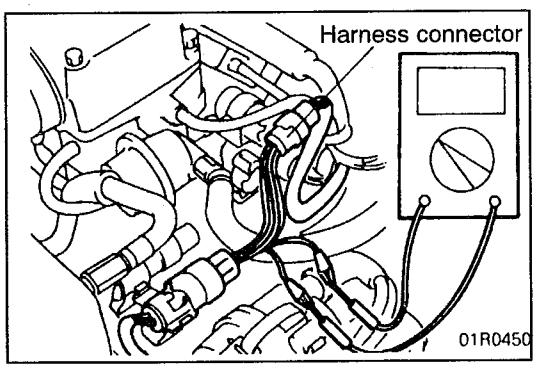

WHEN INSPECTING WITH CONNECTOR CONNECTED (WITH CIRCUIT IN CONDITION OF CONTINUITY)

Waterproof Connectors

Be sure to use the special tool (harness connector). Never insert a test bar from the harness side, because to do so will reduce the waterproof performance and result in corrosion.

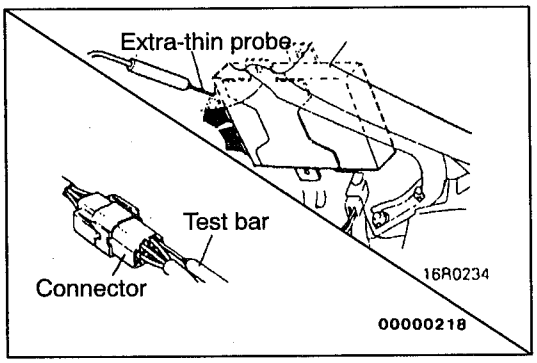

Ordinary (non-waterproof) Connectors

Check by inserting the test bar from the harness side. Note that if the connector (control unit, etc.) is too small to permit insertion of the test bar, it should not be forced; use a special tool (the extra-thin probe in the harness set for checking for this purpose.

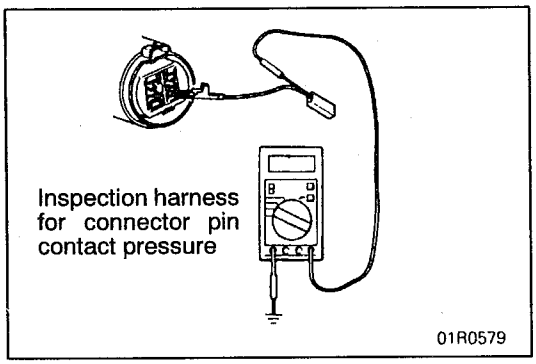

WHEN INSPECTING WITH CONNECTOR DISCONNECTED

<When Inspecting a Female Pin>

Use the special tool (inspection harness for connector pin contact pressure in the harness set for inspection).
The inspection harness for connector pin contact pressure should be used. The test bar should never be forcibly inserted, as it may cause a defective contact.

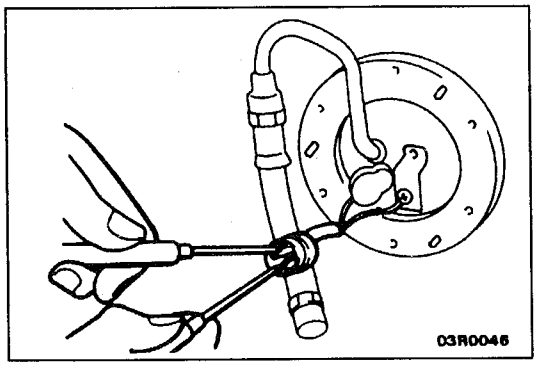

<When Inspecting a Male Pin>

Touch the pin directly with the test bar.

Caution
At this time, be careful not to short the connector pins with the test bars. To do so may damage the circuits inside the ECU.

Connector disconnected or improperly connected

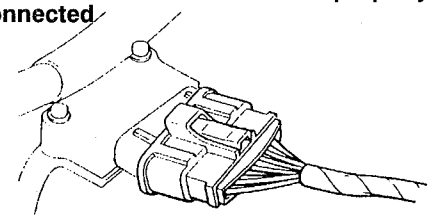

16S0256

Defective connector contact

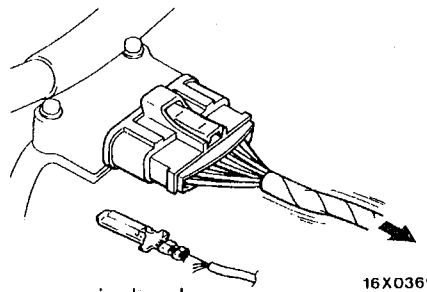

16X0369

Harness wire breakage at terminal section

Low contact pressure

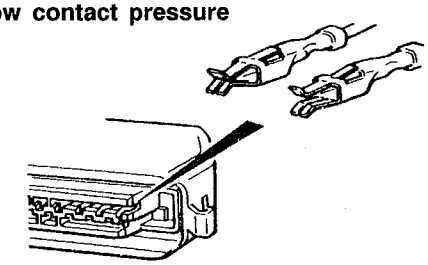

16S0254
00000219

CONNECTOR INSPECTION

VISUAL INSPECTION

- Connector is disconnected or improperly connected
- Connector pins are pulled out
- Due to harness tension at terminal section
- Low contact pressure between male and female terminals
- Low connection pressure due to rusted terminals or foreign matter lodged in terminals

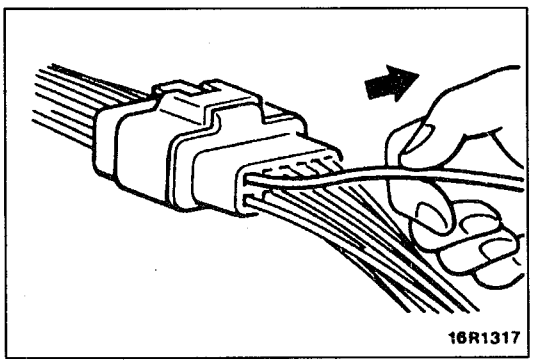

16R1317

CONNECTOR PIN INSPECTION

If the connector pin stopper is damaged, the terminal connections (male and female pins) will not be perfect even if the connector body is connected, and the pins may pull out of the reverse side of the connector. Therefore, gently pull the harnesses one by one to make sure that no pins pull out of the connector.

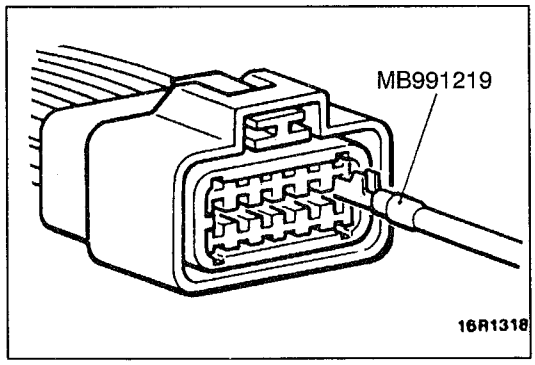

16R1318

CONNECTOR ENGAGEMENT INSPECTION

Use the special tool (connector pin connection pressure inspection harness of the inspection harness set) to inspect the engagement of the male pins and females pins. (Pin drawing force : 1 N or more)

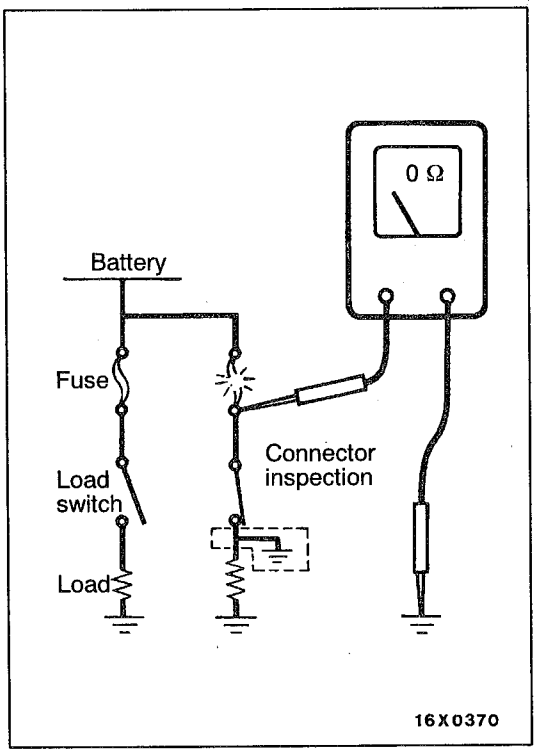

INSPECTION SERVICE POINTS FOR A BLOWN FUSE

Remove the fuse and measure the resistance between the load side of the fuse and the earth. Set the switches of all circuits which are connected to this fuse to a condition of continuity. If the resistance is almost 0 Ω at this time, there is a short somewhere between these switches and the load. If the resistance is not 0 Ω, there is no short at the present time, but a momentary short has probably caused the fuse to blow.

The main causes of a short circuit are the following.
- Harness being clamped by the vehicle body
- Damage to the outer casing of the harness due to wear or heat
- Water getting into the connector or circuitry
- Human error (mistakenly shorting a circuit, etc.)

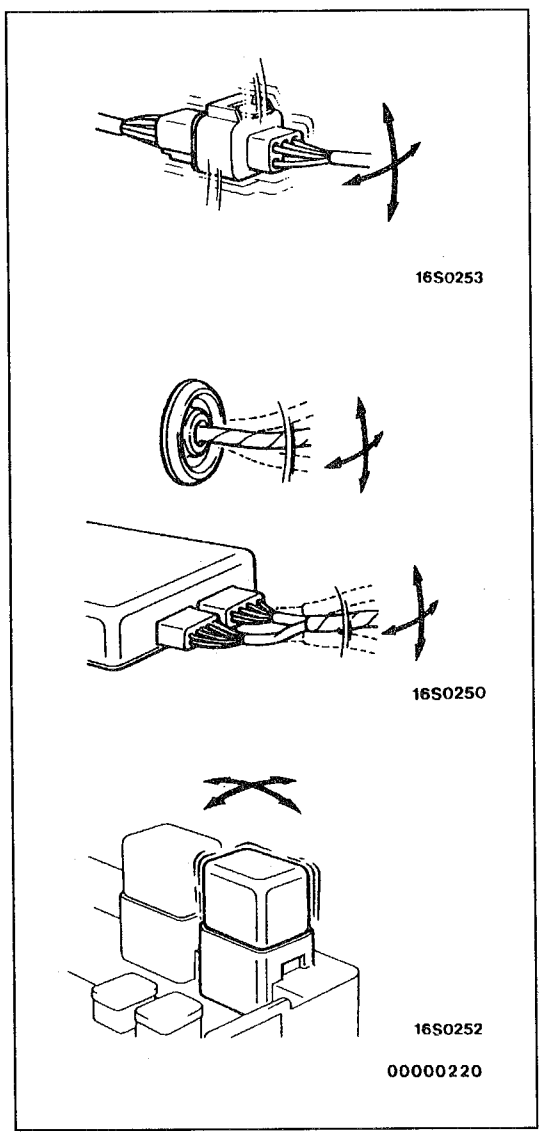

POINTS TO NOTE FOR INTERMITTENT MALFUNCTIONS

Intermittent malfunctions often occur under certain conditions, and if these conditions can be ascertained, determining the cause becomes simple. In order to ascertain the conditions under which an intermittent malfunction occurs, first ask the customer for details about the driving conditions, weather conditions, frequency of occurrence and trouble symptoms, and then try to recreate the trouble symptoms. Next, ascertain whether the reason why the trouble symptom occurred under these conditions is due to vibration, temperature or some other factor. If vibration is thought to be the cause, carry out the following checks with the connectors and components to confirm whether the trouble symptom occurs.
The objects to be checked are connectors and components which are indicated by inspection procedures or given as probable causes (which generates diagnosis codes or trouble symptoms.)
- Gently shake the connector up, down and to the left and right.
- Gently shake the wiring harness up, down and to the left and right.
- Gently rock each sensor and relay, etc. by hand.
- Gently shake the wiring harness at suspensions and other moving parts.

NOTE
If determining the cause is difficult, the flight recorder function of the MUT-II can also be used.

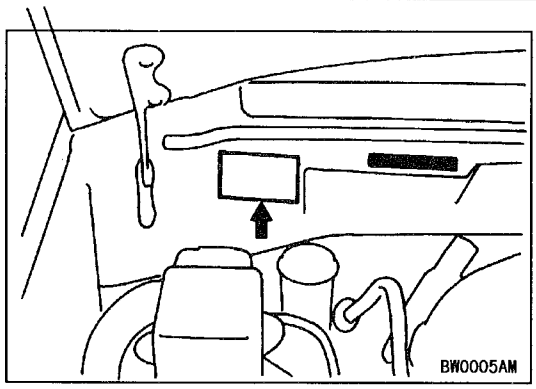

VEHICLE IDENTIFICATION

VEHICLE INFORMATION CODE PLATE

LOCATION

Vehicle information code plate is riveted on the toeboard inside the engine compartment.

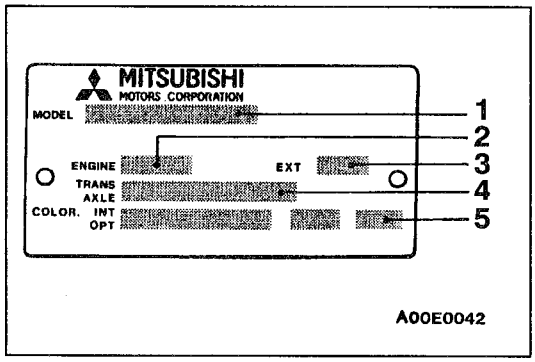

CODE PLATE DESCRIPTION

The plate shows model code, engine model, transmission model, and body colour code.

No.	Item	Contents	Contents
1	MODEL	H76W LNUEL	H76W: Vehicle model
			LNUEL: Model series
2	ENGINE	4G93	Engine model
3	EXT	A71A	Exterior code
4	TRANS AXLE	V5M21 4875	W5M21: Transmission code
			4875: Rear differential reduction
5	COLOR INT OPT	A7141H 03V	A71: Body colour code
			41H: Interior code
			03V: Equipment code

For monotone colour vehicles, the body colour code shall be indicated. For two-tone or three-way two-tone colour vehicles, each colour code only shall be indicated in series.

MODELS

FOR GENERAL EXPORT (Except for CENTRAL AND SOUTH AMERICA COUNTRIES, BRAZIL, HONG KONG, SOUTH AFRICA)

Model code		Engine model	Transmission model	Fuel supply system
H65	WMNUEL	4G18-SOHC (1,584 mℓ)	V5M21 <5M/T>	MPI
	WMNUER			
	WMRUEL		V4AW4 <4A/T>	
	WMRUER			
H76	WLNUEL	4G93-SOHC (1,834 mℓ)	V5M21 <5M/T>	
	WLNUER			
	WLRUEL		V4AW4 <4A/T>	
	WLRUER			

(FOR CENTRAL AND SOUTH AMERICA COUNTRIES)

Model code		Engine model	Transmission model	Fuel supply system
H65	WMNUEL1NQ	4G18-SOHC (1,584 mℓ)	V5M21 <5M/T>	MPI
	WMRUEL1NQ		V4AW4 <4A/T>	
H76	WLNUEL1NQ	4G93-SOHC (1,834 mℓ)	V5M21 <5M/T>	
	WLRUEL1NQ		V4AW4 <4A/T>	

(FOR BRAZIL)

Model code		Engine model	Transmission model	Fuel supply system
H76	WLNUEL1FB	4G93-SOHC (1,834 mℓ)	V5M21 <5M/T>	MPI
	WLRUEL1FB		V4AW4 <4A/T>	

(FOR HONG KONG)

Model code		Engine model	Transmission model	Fuel supply system
H66	WMNUCR1D	4G93-DOHC (1,834 mℓ)	V5M21 <5M/T>	GDI
	WMRUCR1D		V4AW4 <4A/T>	
H76	WLNUCR1D		V5M21 <5M/T>	
	WLRUCR1D		V4AW4 <4A/T>	

(FOR SOUTH AFRICA)

Model code		Engine model	Transmission model	Fuel supply system
H65	WMNUER1S	4G18-SOHC (1,584 mℓ)	V5M21 <5M/T>	MPI
H76	WLNUER1S	4G93-SOHC (1,834 mℓ)	V5M21 <5M/T>	
	WLRUER1S		V4AW4 <4A/T>	

FOR GCC

Model code		Engine model	Transmission model	Fuel supply system
H65	WMNUELW	4G18-SOHC (1,584 mℓ)	V5M21 <5M/T>	MPI
	WMRUELW		V4AW4 <4A/T>	
H76	WLNUELW	4G93-SOHC (1,834 mℓ)	V5M21 <5M/T>	
	WLRUELW		V4AW4 <4A/T>	

FOR AUSTRALIA AND NEW ZEALAND

Model code		Engine model	Transmission model	Fuel supply system
H65	WMNUER8	4G18-SOHC (1,584 mℓ)	V5M21 <5M/T>	MPI
H76	WLNUER8	4G93-SOHC (1,834 mℓ)	V5M21 <5M/T>	
	WLRUER8		V4AW4 <4A/T>	

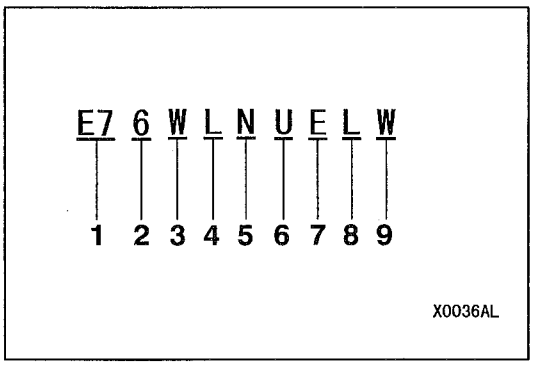

MODEL CODE

No.	Items	Contents
1	Development	H6: MITSUBISHI PAJERO io Short wheelbase H7: MITSUBISHI PAJERO io Long wheelbase
2	Engine type	5: 1,600 mℓ petrol engine 6: 1,800 mℓ petrol engine
3	Sort	W: Wagon
4	Body style	M: 3-door L: 5-door
5	Transmission type	N: 5-speed manual transmission R: 4-speed automatic transmission
6	Trim level	U: GLX
7	Specification engine feature	E: MPI-SOHC C: GDI-DOHC
8	Steering wheel location	L: Left hand R: Right hand
9	Destination	None: For General Export (Except for Central and South America Countries, Brazil, Hong Kong, South Africa) 1NQ: For Central and South America Countries 1FB: For Brazil 1D: Hong Kong 1S: For South Africa W: For GCC 8: For Australia and New Zealand

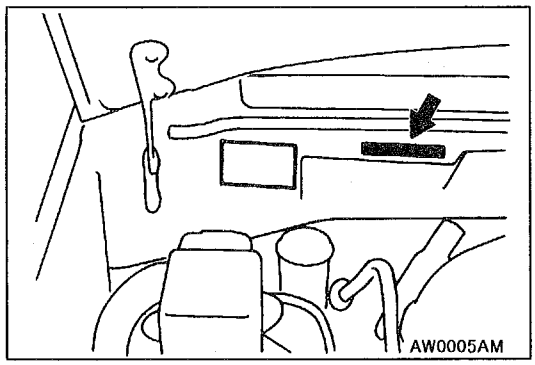

CHASSIS NUMBER

The chassis number is stamped on the toeboard inside the engine compartment.

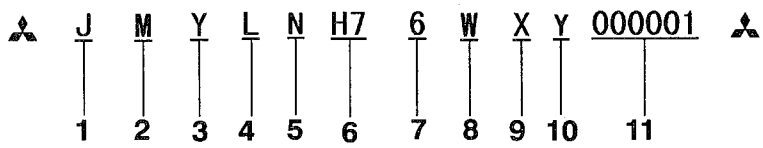

X0035AL

No.	Items		Contents
1	Fixed figure	J	Asia
2	Distribution channel	M	Japan channel
3	Destination	Y	For General Export, GCC, Australia, New Zealand
4	Body style	L	5-door
		M	3-door
5	Transmission type	N	5-speed manual transmission
		R	4-speed automatic transmission
6	Development order	H6	PAJERO io Short wheelbase
		H7	PAJERO io Long wheelbase
7	Engine	6	4G93: 1,834 mℓ petrol engine
		5	4G18: 1,584 mℓ petrol engine
8	Sort	W	Wagon
9	Model year	X	1999
10	Plant	Y	Ooe Plant of Nagoya Motor Vehicle Works
11	Serial number	–	–

<4G18>

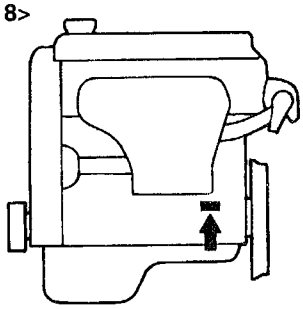

W1290AL

<4G93>

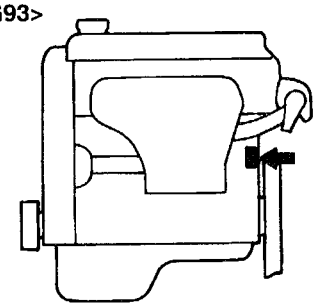

A00R0003

ENGINE MODEL NUMBER

1. The engine model number is stamped on the cylinder block as shown below.

Engine model	Engine displacement mℓ
4G18	1,584
4G93	1,834

2. The engine serial number is stamped near the engine model number.

Engine serial number	AA0201 to YY9999

MAJOR SPECIFICATIONS

<3-door Models>

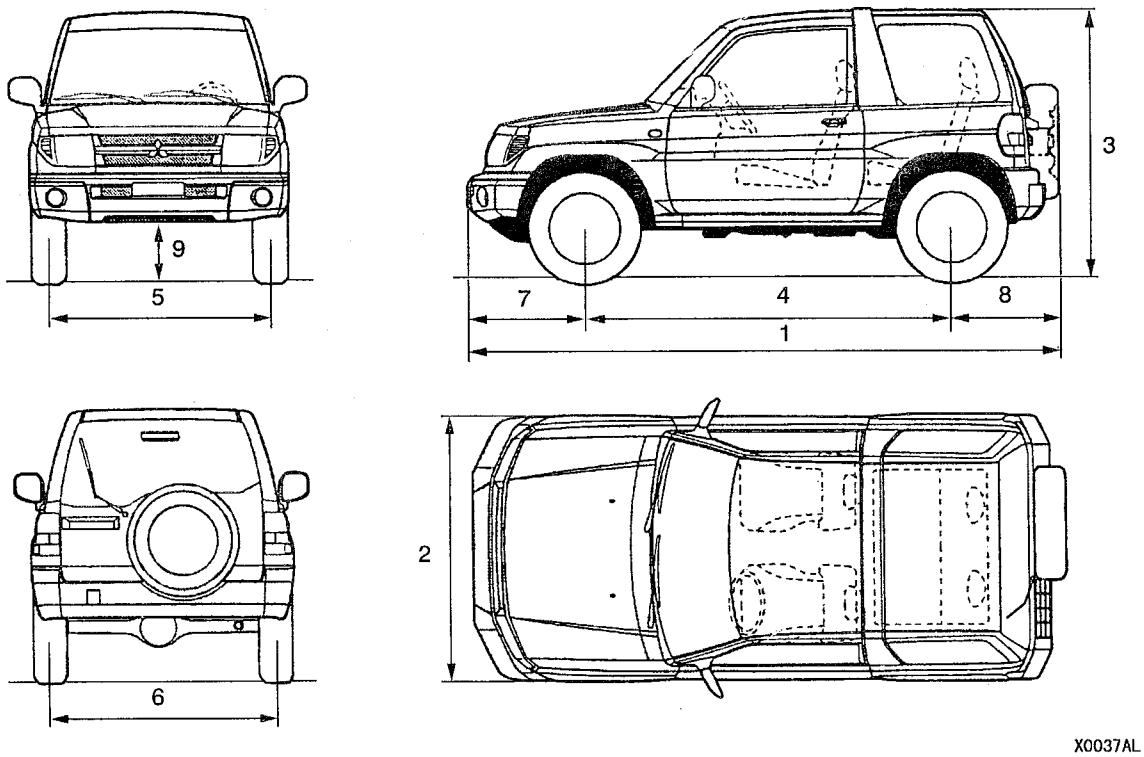

X0037AL

Items			General Export (Except for Central and South America Countries, Hong Kong and South Africa)		General Export (Central and South America Countries)	
			H65WM NUEL, NUER	H65WM RUEL, RUER	H65WM NUEL1NQ	H65WM RUEL1NQ
Vehicle dimensions mm	Overall length	1	3,730/3,760*1			
	Overall width	2	1,680			
	Overall height (unladen)	3	1,690/1,730*2/1,735*3			
	Wheelbase	4	2,280			
	Track-front	5	1,435			
	Track-rear	6	1,445			
	Overhang-front	7	755/785*1			
	Overhang-rear	8	695			
	Ground clearance (unladen)	9	195			
Vehicle weight kg	Kerb weight		1,205	1,235	1,210	1,240
	Max. gross vehicle weight		1,605	1,625	1,610	1,630
	Max. axle weight rating-front		680	700	685	705
	Max. axle weight rating-rear		525	535	525	535
Seating capacity			4			
Engine	Model No.		4G18			
	Total displacement mℓ		1,584			
Transmission	Model No.		V5M21	V4AW4	V5M21	V4AW4
	Type		5-speed manual	4-speed automatic	5-speed manual	4-speed automatic
Fuel system	Fuel supply system		Electronically controlled multi-point injection			

NOTE
*1: Vehicles with bumper extension
*2: Vehicles with roof rails
*3: Vehicles with roof spoiler

Items			General Export (Hong Kong)		General Export (South Africa)
			H66WMNUCR1D	H66WMRUCR1D	H65WMNUER1S
Vehicle dimensions mm	Overall length	1	3,730/3,760*1		
	Overall width	2	1,680		
	Overall height (unladen)	3	1,690/1,730*2/1,735*3		
	Wheelbase	4	2,280		
	Track-front	5	1,435		
	Track-rear	6	1,445		
	Overhang-front	7	755/785*1		
	Overhang-rear	8	695		
	Ground clearance (unladen)	9	195		
Vehicle weight kg	Kerb weight		1270	1290	1210
	Max. gross vehicle weight		1670	1680	1565
	Max. axle weight rating-front		765	775	685
	Max. axle weight rating-rear		505	515	525
Seating capacity			4		
Engine	Model No.		4G93		4G18
	Total displacement mℓ		1,834		1,584
Transmission	Model No.		V5M21	V4AW4	V5M21
	Type		5-speed manual	4-speed automatic	5-speed manual
Fuel system	Fuel supply system		Gasoline Direct Injection		Electronically controlled multi-point injection

NOTE
*1: Vehicles with bumper extension
*2: Vehicles with roof rails
*3: Vehicles with roof spoiler

Items			GCC		Australia and New Zealand
			H65WMNUELW	H65WMRUELW	H65WMNUER8
Vehicle dimensions mm	Overall length	1	3,730/3,760*1		
	Overall width	2	1,680		
	Overall height (unladen)	3	1,690/1,730*2/1,735*3		
	Wheelbase	4	2,280		
	Track-front	5	1,435		
	Track-rear	6	1,445		
	Overhang-front	7	755/785*1		
	Overhang-rear	8	695		
	Ground clearance (unladen)	9	195		
Vehicle weight kg	Kerb weight		1,215	1,260	1230
	Max. gross vehicle weight		1,605	1,635	1610
	Max. axle weight rating-front		695	725	700
	Max. axle weight rating-rear		520	535	530
Seating capacity			4		
Engine	Model No.		4G18		
	Total displacement mℓ		1,584		
Transmission	Model No.		V5M21	V4AW4	V5M21
	Type		5-speed manual	4-speed automatic	5-speed manual
Fuel system	Fuel supply system		Electronically controlled multi-point injection		

NOTE
*1: Vehicles with bumper extension
*2: Vehicles with roof rails
*3: Vehicles with roof spoiler

<5-door Models>

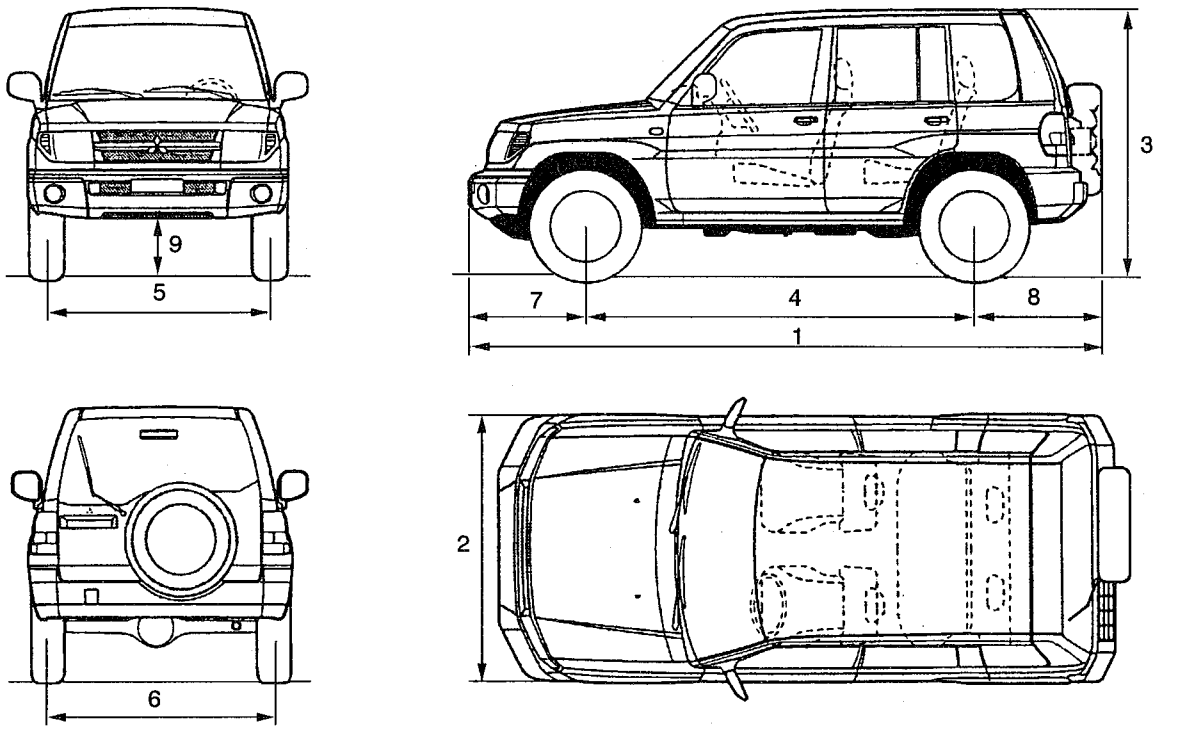

Items			General Export (Except for Central and South America Countries, Brazil, Hong Kong and South Africa)		General Export (Central and South America Countries and Brazil)	
			H76WL NUEL, NUER	H76WL RUEL, RUER	H76WL NUEL1NQ NUEL1FB	H76WL RUEL1NQ NUEL1FB
Vehicle dimensions mm	Overall length	1	4,030/4,060*1			
	Overall width	2	1,680/1,695*2			
	Overall height (unladen)	3	1,700/1,740*3/1,725*4			
	Wheelbase	4	2,450			
	Track-front	5	1,435			
	Track-rear	6	1,445			
	Overhang-front	7	755/785*1			
	Overhang-rear	8	825			
	Ground clearance (unladen)	9	195			
Vehicle weight kg	Kerb weight		1,325	1,330	1,210	1,240
	Max. gross vehicle weight		1,785	1,805	1,790	1,810
	Max. axle weight rating-front		730	750	735	755
	Max. axle weight rating-rear		595	610	595	610
Seating capacity			5			
Engine	Model No.		4G93			
	Total displacement mℓ		1,834			
Transmission	Model No.		V5M21	V4AW4	V5M21	V4AW4
	Type		5-speed manual	4-speed automatic	5-speed manual	4-speed automatic
Fuel system	Fuel supply system		Electronically controlled multi-point injection			

NOTE
*1: Vehicles with bumper extension
*2: Vehicles with side mouldings
*3: Vehicles with roof rails
*4: Vehicles with roof spoiler

Items			General Export (Hong Kong)		General Export (South Africa)	
			H76WL NUCR1D	H76WL RUCR1D	H76WLNUER1S	H76WLRUER1S
Vehicle dimensions mm	Overall length	1	4,030/4,060*1			
	Overall width	2	1,680/1,695*2			
	Overall height (unladen)	3	1,700/1,740*3/1,725*4			
	Wheelbase	4	2,450			
	Track-front	5	1,435			
	Track-rear	6	1,445			
	Overhang-front	7	755/785*1			
	Overhang-rear	8	825			
	Ground clearance (unladen)	9	195			
Vehicle weight kg	Kerb weight		1350	1370	1330	1365
	Max. gross vehicle weight		1820	1830	1760	1795
	Max. axle weight rating-front		785	795	735	755
	Max. axle weight rating-rear		565	575	595	610
Seating capacity			5			
Engine	Model No.		4G93			
	Total displacement mℓ		1,834			
Transmission	Model No.		V5M21	V4AW4	V5M21	V4AW4
	Type		5-speed manual	4-speed automatic	5-speed manual	4-speed automatic
Fuel system	Fuel supply system		Gasoline Direct Injection		Electronically controlled multi-point injection	

NOTE
*1: Vehicles with bumper extension
*2: Vehicles with side mouldings
*3: Vehicles with roof rails
*4: Vehicles with roof spoiler

Items			GCC		Australia and New Zealand	
			H76WLNUELW	H76WLRUELW	H76WLNUER8	H76WLRUER8
Vehicle dimensions mm	Overall length	1	4,030/4,060*1			
	Overall width	2	1,680/1,695*2			
	Overall height (unladen)	3	1,700/1,740*3/1,725*4			
	Wheelbase	4	2,450			
	Track-front	5	1,435			
	Track-rear	6	1,445			
	Overhang-front	7	755/785*1			
	Overhang-rear	8	825			
	Ground clearance (unladen)	9	195			
Vehicle weight kg	Kerb weight		1,315	1,350	1310	1330
	Max. gross vehicle weight		1,770	1,790	1780	1790
	Max. axle weight rating-front		695	725	730	740
	Max. axle weight rating-rear		580	595	580	590
Seating capacity			5			
Engine	Model No.		4G93			
	Total displacement mℓ		1,834			
Transmis-sion	Model No.		V5M21	V4AW4	V5M21	V4AW4
	Type		5-speed manual	4-speed automatic	5-speed manual	4-speed automatic
Fuel system	Fuel supply system		Electronically controlled multi-point injection			

NOTE
*1: Vehicles with bumper extension
*2: Vehicles with side mouldings
*3: Vehicles with roof rails
*4: Vehicles with roof spoiler

PRECAUTIONS BEFORE SERVICE

SUPPLEMENTAL RESTRAINT SYSTEM (SRS)

1. Items to follow when servicing SRS
   (1) Be sure to read GROUP 52B – Supplemental Restraint System (SRS).
   For safe operations, please follow the directions and heed all warnings.
   (2) Wait at least 60 seconds after disconnecting the battery cable before doing any further work.
   The SRS is designed to retain enough voltage to deploy the air bags even after the battery has been disconnected. Serious injury may result from unintended air bag deployment if work is done on the SRS immediately after the battery cable is disconnected.
   (3) Warning/caution labels must be heeded when servicing or handling SRS components. Warning/caution labels are attached in the following locations.
   - Sun visor
   - Glove box
   - SRS air bag control unit
   - Steering wheel
   - Steering gear box
   - Driver's and passenger's air bag modules
   - Clock spring
   - Side air bag modules
   - Side impact sensors

   (4) Always use the designated special tools and test equipment.
   (5) Store components removed from the SRS in a clean and dry place.
   The air bag modules should be stored on a flat surface and placed so that the deployment surfaces are facing upward.
   Do not place anything on top of them.
   (6) Never attempt to disassemble or repair the SRS components (SRS air bag control unit, air bag modules, clock spring and side impact sensors). If faulty replace them.
   (7) Whenever you finish servicing the SRS, check the SRS warning lamp operation to make sure that the system functions properly.
   (8) Be sure to deploy the air bag before disposing of the air bag modules or disposing of a vehicle equipped with air bag. (Refer to GROUP 52B – Air Bag Module Disposal Procedures.)
2. Observe the following when carrying out operations on places where SRS components are installed, including operations not directly related to the SRS air bag.
   (1) When removing or installing parts do not allow any impact or shock to the SRS components.
   (2) SRS components should not be subjected to heat over 93°C, so remove the SRS components before drying or baking the vehicle after painting.
   After re-installing them, check the SRS warning lamp operation to make sure that the system functions properly.

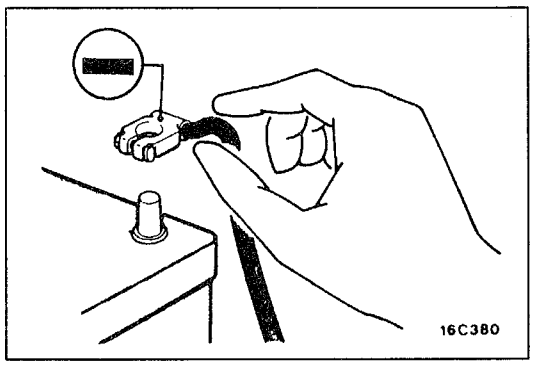

SERVICING THE ELECTRICAL SYSTEM

Before replacing a component related to the electrical system and before undertaking any repair procedures involving the electrical system, be sure to first disconnect the negative (–) cable from the battery in order to avoid damage caused by short-circuiting.

Caution
Before connecting or disconnecting the negative (–) cable, be sure to turn off the ignition switch and the lighting switch.
(If this is not done, there is the possibility of semiconductor parts being damaged.)

APPLICATION OF ANTI-CORROSION AGENTS AND UNDERCOATS

If oil or grease gets onto the oxygen sensor, it will cause a drop in the performance of the sensor.
Cover the oxygen sensor with a protective cover when applying anti-corrosion agents and undercoats.

PRE-INSPECTION CONDITION

"Pre-inspection condition" refers to the condition that the vehicle must be in before proper engine inspection can be carried out. If you see the words "Set the vehicle to the pre-inspection condition". in this manual, it means to set the vehicle to the following condition.

- Engine coolant temperature: 80 to 90°C
- Lamps, electric cooling fan and all accessories: OFF
- M/T: Neutral
- A/T: P range

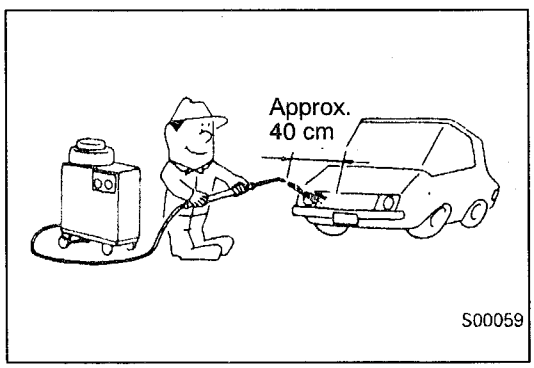

VEHICLE WASHING

If high-pressure car-washing equipment or steam car-washing equipment is used to wash the vehicle, be sure to note the following information in order to avoid damage to plastic components, etc.

- Spray nozzle distance: Approx. 40 cm or more
- Spray pressure: 3,900 kPa or less
- Spray temperature: 82°C or less
- Time of concentrated spray to one point: within 30 sec.

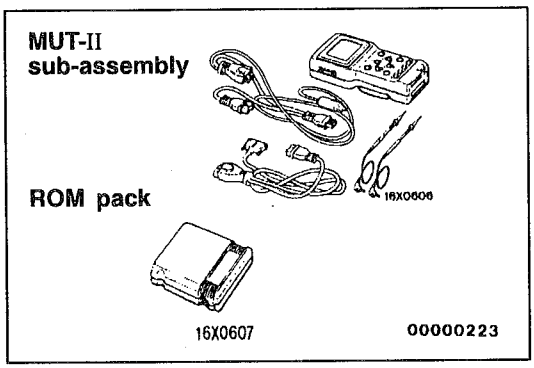

MUT-II

Refer to the "MUT-II REFERENCE MANUAL" or "MUT-II OPERATING INSTRUCTIONS" for instructions on handling the MUT-II.

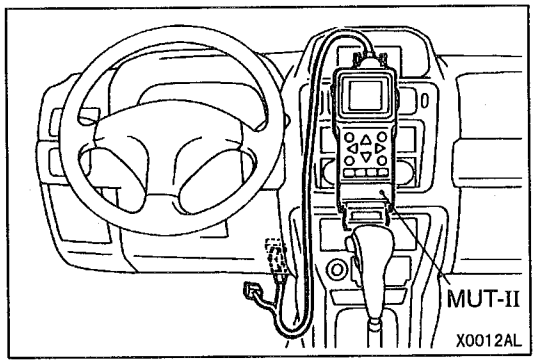

Connect the MUT-II to the diagnosis connector as shown in the illustration.

Caution
Turn the ignition switch to the LOCK (OFF) position before connecting or disconnecting the MUT-II.

IN ORDER TO PREVENT VEHICLES FROM FIRE

"Improper installation of electrical or fuel related parts could cause a fire. In order to retain the high quality and safety of the vehicle, it is important that any accessories that may be fitted or modifications/repairs that may be carried out which involve the electrical or fuel systems, MUST be carried out in accordance with MMC's information/Instructions".

ENGINE OILS

Health Warning

Prolonged and repeated contact with mineral oil will result in the removal of natural fats from the skin, leading to dryness, irritation and dermatitis. In addition, used engine oil contains potentially harmful contaminants which may cause skin cancer. Adequate means of skin protection and washing facilities must be provided.

Recommended Precautions

The most effective precaution is to adapt working practices which prevent, as far as practicable, the risk of skin contact with mineral oils, for example by using enclosed systems for handling used engine oil and by degreasing components, where practicable, before handling them.

Other precautions:

- Avoid prolonged and repeated contact with oils, particularly used engine oils.
- Wear protective clothing, including impervious gloves where practicable.
- Avoid contaminating clothes, particularly underpants, with oil.
- Do not put oily rags in pockets, the use of overalls without pockets will avoid this.
- Do not wear heavily soiled clothing and oil-impregnated foot-wear. Overalls must be cleaned regularly and kept separately from personal clothing.
- Where there is a risk of eye contact, eye protection should be worn, for example, chemical goggles or face shields; in addition an eye wash facility should be provided.
- Obtain First Aid treatment immediately for open cuts and wounds.
- Wash regularly with soap and water to ensure all oil is removed, especially before meals (skin cleansers and nail brushes will help). After cleaning, the application of preparations containing lanolin to replace the natural skin oils is advised.
- Do not use petrol, kerosine, diesel fuel, gas oil, thinners or solvents for cleaning skin.
- Use barrier creams, applying them before each work period, to help the removal of oil from the skin after work.
- If skin disorders develop, obtain medical advice without delay.

SUPPLEMENTAL RESTRAINT SYSTEM (SRS)

To improve safety, the SRS is available as optional parts. This system enhances collision safety by restraining the front occupants in case of an accident.
The SRS consists of four air bag modules, SRS air bag control unit (SRS-ECU), side impact sensors, SRS warning lamp and clock spring. The air bags are located in the centre of the steering wheel, above the glove box, and built into the front seat back assemblies. Each air bag has a folded air bag and an inflator unit. The SRS-ECU under the floor console monitors the system and has a safing G-sensor and an analog G-sensor. The side impact sensors inside the center pillars or the quarter panels, inner monitor any shocks coming from the side of the vehicle. The warning lamp on the instrument panel indicates the operational status of the SRS. The clock spring is installed in the steering column.
The SRS side air bags deploy if an impact received at the side of the vehicle is stronger than a certain set value, in order to protect the front seat occupant's torso in the event of a collision. Only authorized service personnel should do work on or around the SRS components. Those service personnel should read this manual carefully before starting any such work. Extreme care must be used when servicing the SRS to avoid injury to the service personnel (by inadvertent deployment of the air bags) or the driver (by rendering the SRS inoperative).

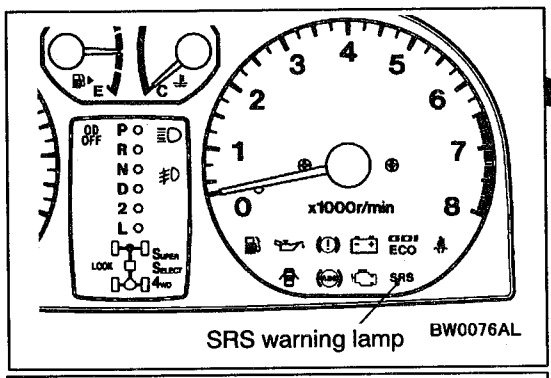

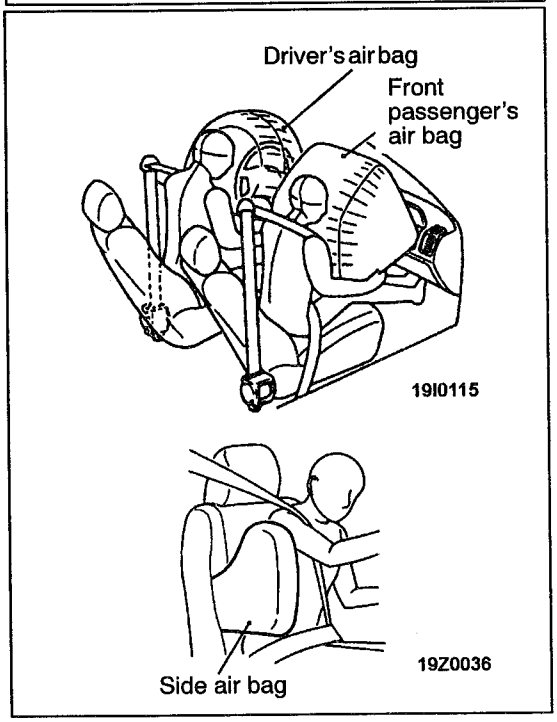

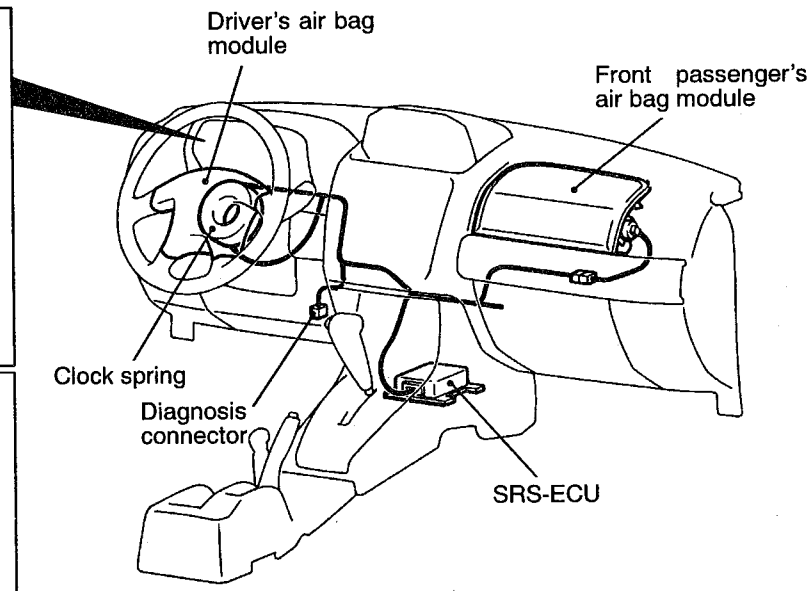

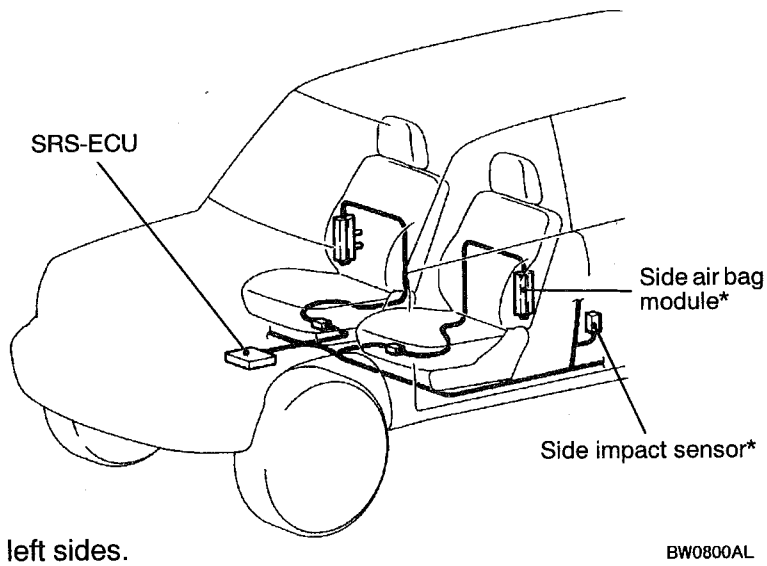

NOTE
*: Indicates the parts equipped on the right and left sides.

SRS SERVICE PRECAUTIONS

1. In order to avoid injury to yourself or others from accidental deployment of the air bag during servicing, read and carefully follow all the precautions and procedures described in this manual.
2. Do not use any electrical test equipment on or near SRS components, except those specified on GROUP 52B.
3. **Never Attempt to Repair the Following Components:**
   - SRS air bag control unit (SRS-ECU)
   - Clock spring
   - Driver's and front passenger's air bag modules
   - Side air bag modules
   - Side impact sensors

NOTE
If any of these components are diagnosed as faulty, they should only be replaced, in accordance with the INDIVIDUAL COMPONENTS SERVICE procedures in this manual. (Refer to GROUP 52B.)

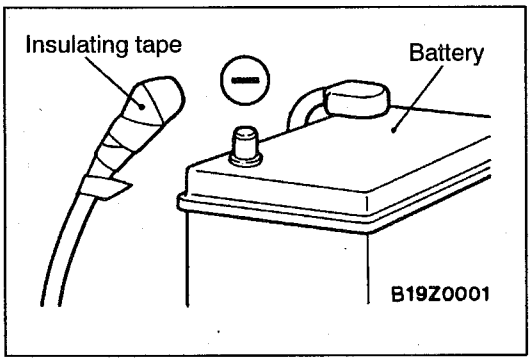

4. **After disconnecting the negative (–) battery cable, wait 60 seconds at least before any service and insulate the disconnected cable with tape. The SRS retain enough voltage to deploy the air bags for a short time even after the disconnection of the battery. So, serious injury may result by accidental air bag deployment if a work is done on the SRS just after the disconnection of the battery.**

SRS-ECU connector

<Vehicles without SRS side air bag>

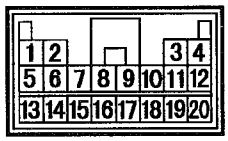

W0997AL

<Vehicles with SRS side air bag>

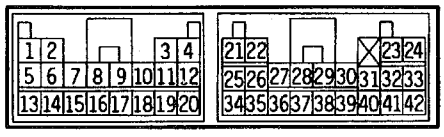

W0582AU

5. Do not attempt to repair the wiring harness connectors of the SRS. If the connector(s) are diagnosed as defective, replace the wiring harness(es). If the harness(es) are diagnosed as faulty, replace or repair the wiring harness(es) according to the table that follows.

SRS-ECU Terminal No.	Destination of harness	Corrective action
7	Instrument panel wiring harness → Earth	Repair or replace each wiring harness
8	Instrument panel wiring harness → Combination meter (SRS warning lamp)	
9, 10	Instrument panel wiring harness → Front passenger's air bag module	
11, 12	Instrument panel wiring harness → Clock spring → Driver's air bag module)	Repair or replace the dash wiring harness. Replace clock spring.
13	Instrument panel wiring harness → Junction block (fuse No.8)	Repair or replace each wiring harness.
16	Instrument panel wiring harness → Junction block (fuse No.6)	
20	Instrument panel wiring harness → Diagnosis connector	
21, 22	Side air bag wiring harness → Side air bag module (L.H.)	
23, 24	Side air bag wiring harness → Side air bag module (R.H.)	
34, 36	Side air bag wiring harness → Side impact sensor (L.H.)	
40, 42	Side air bag wiring harness → Side impact sensor (R.H.)	

6. Inspection of the SRS-ECU harness connector should be carried out by the following procedure.
Insert the special tool (probe, MB991222, in the harness set) into the connector from harness side (rear side), and connect the tester to this probe. If any tool than specified is used, damage to the harness and other components will result. Furthermore, measurement should not be carried out by touching the probe directly against the terminals from the front of the connector. The terminals are plated to increase their conductivity, so that if they are touched directly by the probe, the plating may break, which will cause drops in reliability.

<Vehicles without SRS side air bag>

SRS-ECU harness connector

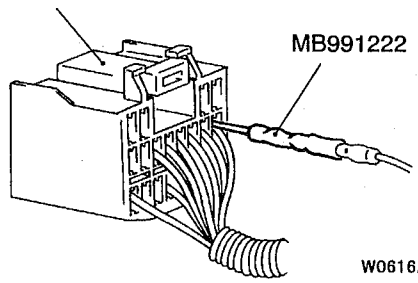

W0616AL

SRS-ECU harness connector (rear view)

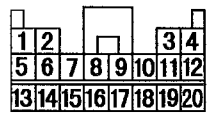

W0999AL

<Vehicles with SRS side air bag>

SRS-ECU harness connector

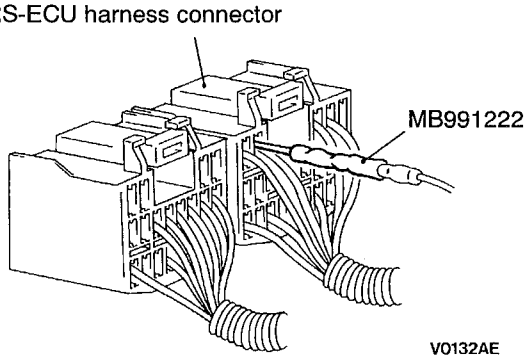

V0132AE

SRS-ECU harness connector (rear view)

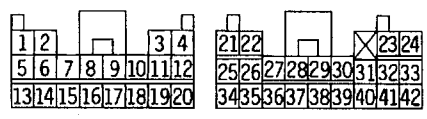

W0584AU

7. SRS components should not be subjected to temperature over 93°C, so remove the SRS-ECU, driver's and front passenger's air bag modules, clock spring, side impact sensors and front seat assemblies (side air bag modules) before drying or baking the vehicle after painting.
8. Whenever you finish servicing the SRS, check warning lamp operation to make sure that the system functions properly. (Refer to GROUP 52B.)
9. Make certain that the ignition switch is LOCK (OFF) position when the MUT-II is connected or disconnected.
10. If you have any questions about the SRS, please contact your local distributor.

NOTE
SERIOUS INJURY CAN RESULT FROM UNINTENDED AIR BAG DEPLOYMENT, SO USE ONLY THE PROCEDURES AND EQUIPMENT SPECIFIED IN THIS MANUAL.

SUPPORT LOCATIONS FOR LIFTING AND JACKING

Caution
Do not support the vehicles at locations other than specified supporting points. Doing so will cause damage, etc.

SUPPORT POSITIONS FOR A GARAGE JACK AND AXLE STANDS

GARAGE JACK

Caution
Never support any point other than the specified ones, or deformation will result.

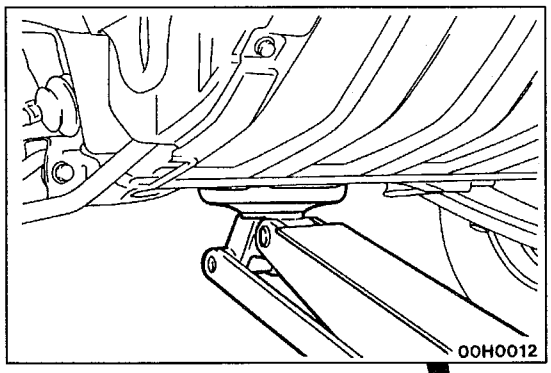

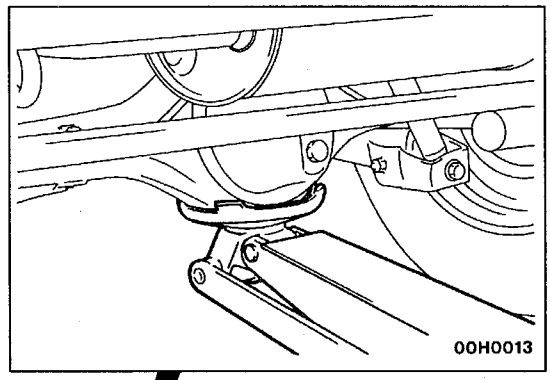

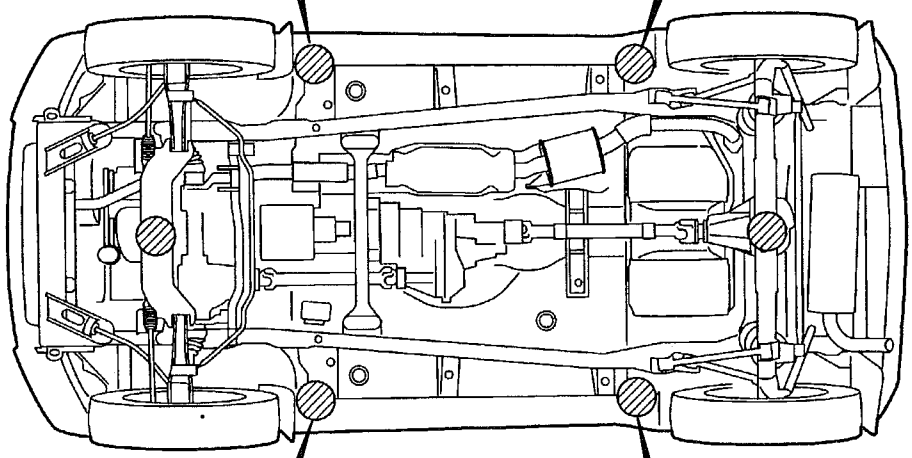

X0010AL

AXLE STANDS

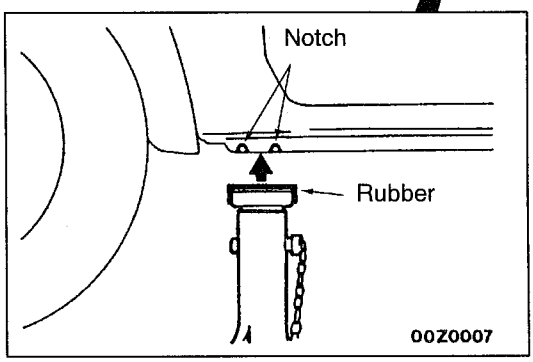

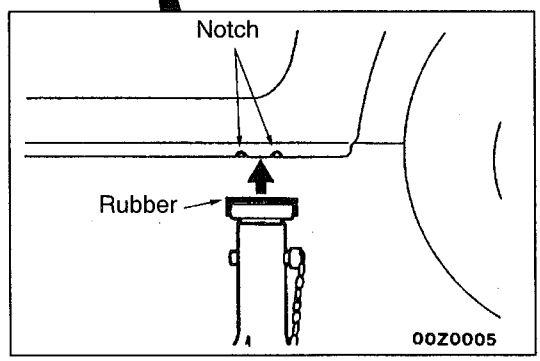

00010034

SUPPORT POSITIONS FOR A SINGLE-POST LIFT OR DOUBLE-POST LIFT

Caution
When service procedures require removing the rear suspension, spare tyre and rear bumper, place additional weight on rear end of vehicle or anchor vehicle to hoist to prevent tipping of centre of gravity changes.

DOUBLE-POST LIFT

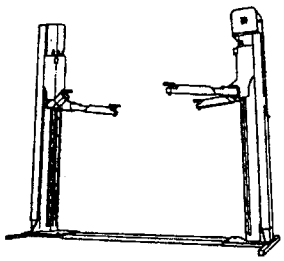

00E610

SINGLE-POST LIFT

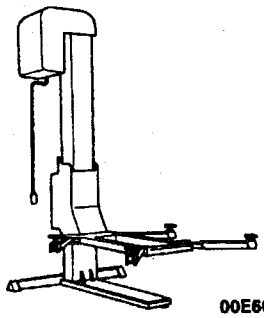

00E609

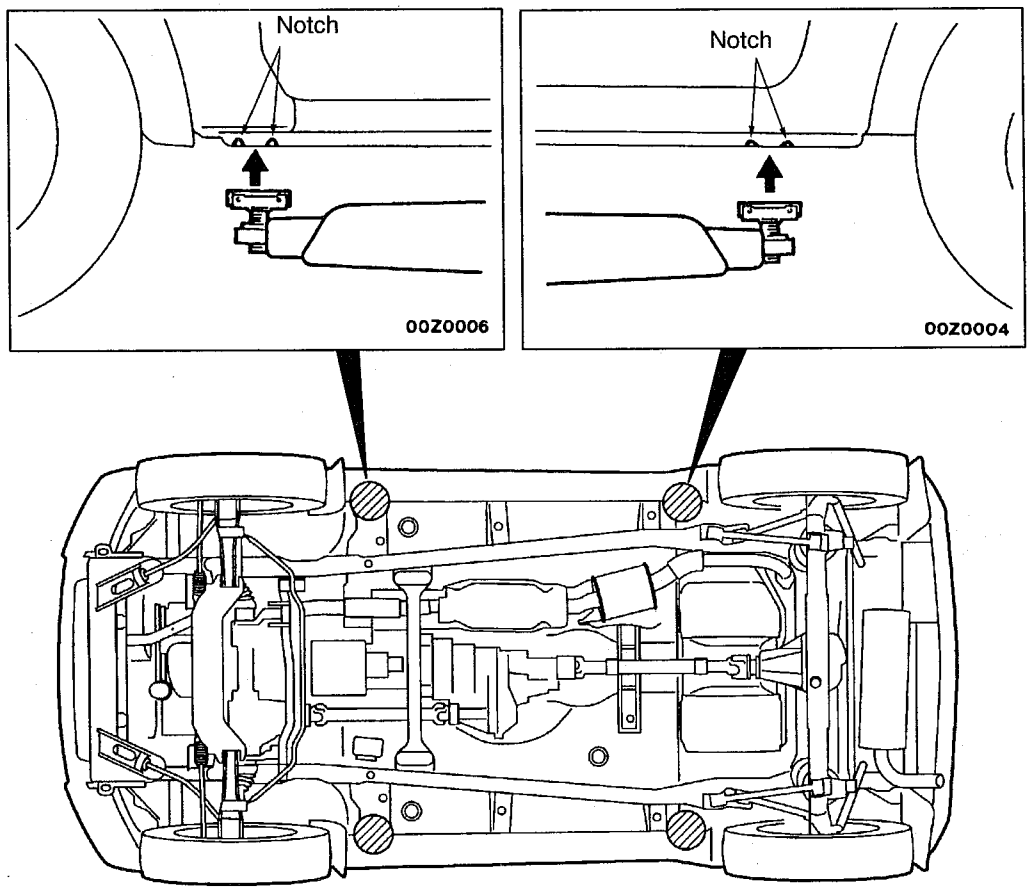

X0011AL
00010035

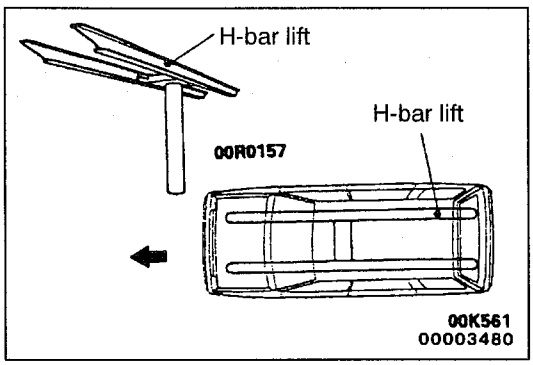

SUPPORT POSITIONS AND SUPPORT METHOD FOR AN H-BAR LIFT

Caution
When service procedures require removing the rear suspension, fuel tank, spare tyre and rear bumper, place additional weight on rear end of vehicle or anchor vehicle to hoist to prevent tipping of centre of gravity changes.

When H-bar lift is used to lift up vehicles, use of metallic attachment attached to the H-bar lift may cause damage to the suspension arm etc. Therefore, lift up the vehicle by the following procedure.

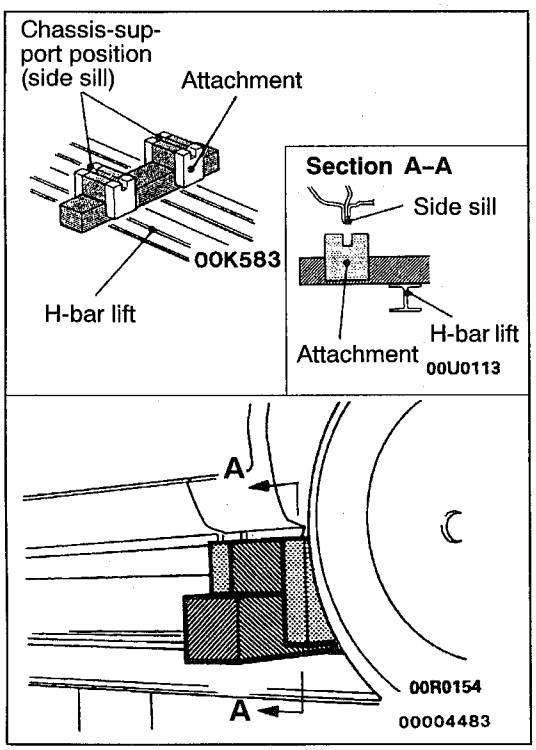

1. Place the vehicle on the H-bar lift (same direction).
2. Place attachments on the H-bar lift at the designated chassis-support positions. When making the attachments, refer to the section concerning making them.

   Caution
   If support is at any location other than the designated positions, the body or suspension might be deformed or otherwise damaged, so care should be taken to support only at the correct (designated) positions.
3. Raise the H-bar lift to the height at which the vehicle is slightly raised and check to be sure that the vehicle is correctly and sufficiently secured; then raise the vehicle.

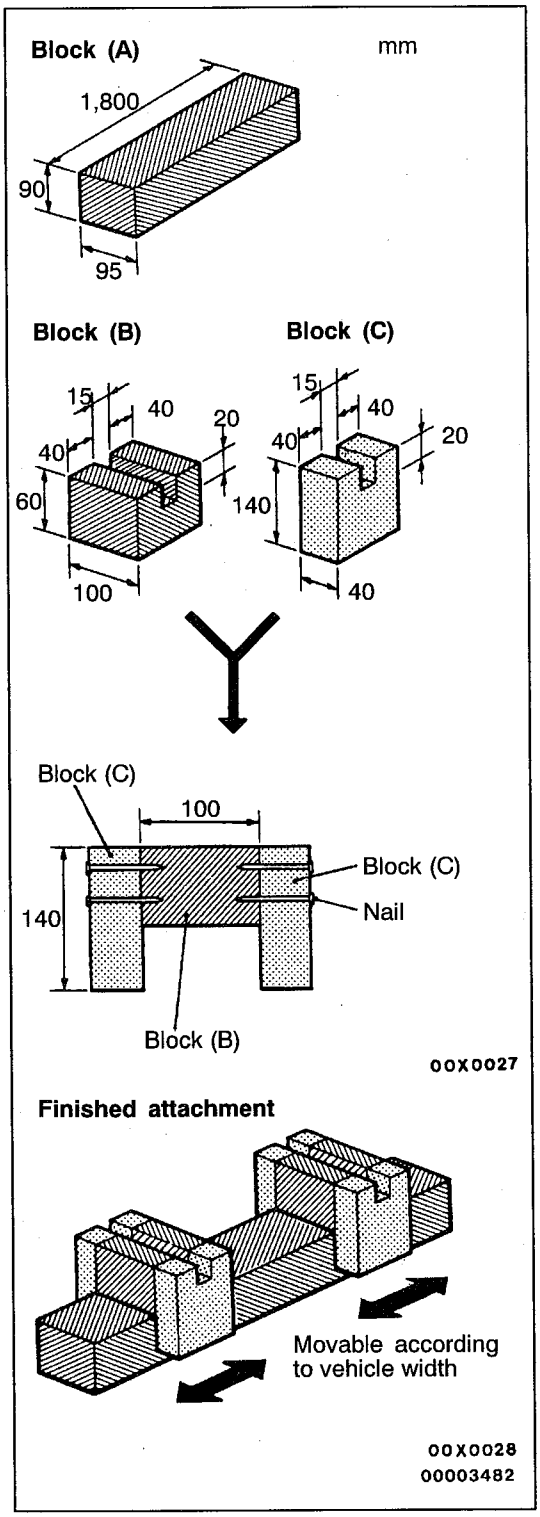

PREPARATION OF "ATTACHMENTS"

1. Prepare the blocks (wooden) and nails as shown in the figure.

Item	Dimensions mm	Quantity
Block (A)	90 × 95 × 1,800	2
Block (B)	60 × 100 × 95	4
Block (C)	140 × 40 × 95	8
Nail	70 or more	32

Caution
The wood selected for the blocks must be hard.

2. For the (B) blocks and (C) blocks, use a saw and chisel or similar tool to make grooves of the dimensions shown in the figure.
3. Make four "ATTACHMENTS" such as shown in the figure nailing (B) and (C) blocks so that each (B) blocks is sandwiches between (C) blocks.

STANDARD PART/TIGHTENING-TORQUE TABLE

Each torque value in the table is a standard value for tightening under the following conditions.
(1) Bolts, nuts and washers are all made of steel and plated with zinc.
(2) The threads and bearing surface of bolts and nuts are all in dry condition.

The values in the table are not applicable:
(1) If toothed washers are inserted.
(2) If plastic parts are fastened.
(3) If bolts are tightened to plastic or die-cast inserted nuts.
(4) If self-tapping screws or self-locking nuts are used.

Standard bolt and nut tightening torque

Thread size		Torque Nm		
Bolt nominal diameter (mm)	Pitch (mm)	Head mark "4"	Head mark "7"	Head mark "8"
M5	0.8	2.5	4.9	5.9
M6	1.0	4.9	8.8	9.8
M8	1.25	12	22	25
M10	1.25	24	44	52
M12	1.25	41	81	96
M14	1.5	72	137	157
M16	1.5	111	206	235
M18	1.5	167	304	343
M20	1.5	226	412	481
M22	1.5	304	559	647
M24	1.5	392	735	853

Flange bolt and nut tightening torque

Thread size		Torque Nm		
Bolt nominal diameter (mm)	Pitch (mm)	Head mark "4"	Head mark "7"	Head mark "8"
M6	1.0	4.9	9.8	12
M8	1.25	13	24	28
M10	1.25	26	49	57
M10	1.5	24	44	54
M12	1.25	46	93	103
M12	1.75	42	81	96